KOHLER®

Components® | K-78379

Double towel arm

Features

- Open-ended design for easy access
- Coordinates with Components faucets, accessories, and showering components to complete your bathroom



Available Colors/Finishes

Color tiles intended for reference only.

	CP	Polished Chrome
	SN	Vibrant Polished Nickel
	AF	Vibrant French Gold
	BN	Vibrant Brushed Nickel
	BV	Vibrant Brushed Bronze
	BL	Matte Black
	2MB	Vibrant Brushed Moderne Brass
	TT	Vibrant Titanium

1-800-4KOHLER (1-800-456-4537)
Kohler Co. reserves the right to make revisions without notice to product specifications.
For the most current specification sheet, go to www.kohler.com USA or www.kohler.ca Canada.
11-08-2026 22:14 - US-CA

THE BOLD LOOK OF KOHLER®

Codes/Standards

None Applicable

Material

- Premium metal construction for durability and reliability
- KOHLER finishes resist corrosion and tarnishing

Recommended Products/Accessories

- K-23723 Faucet cleaner

Warranty

See website for detailed warranty information.

KOHLER® Faucet Lifetime Limited Warranty

1-800-4KOHLER (1-800-456-4537)
Kohler Co. reserves the right to make revisions without notice to product specifications.
For the most current specification sheet, go to www.kohler.com USA or www.kohler.ca Canada.
11-08-2026 22:14 - US-CA

THE BOLD LOOK OF KOHLER®

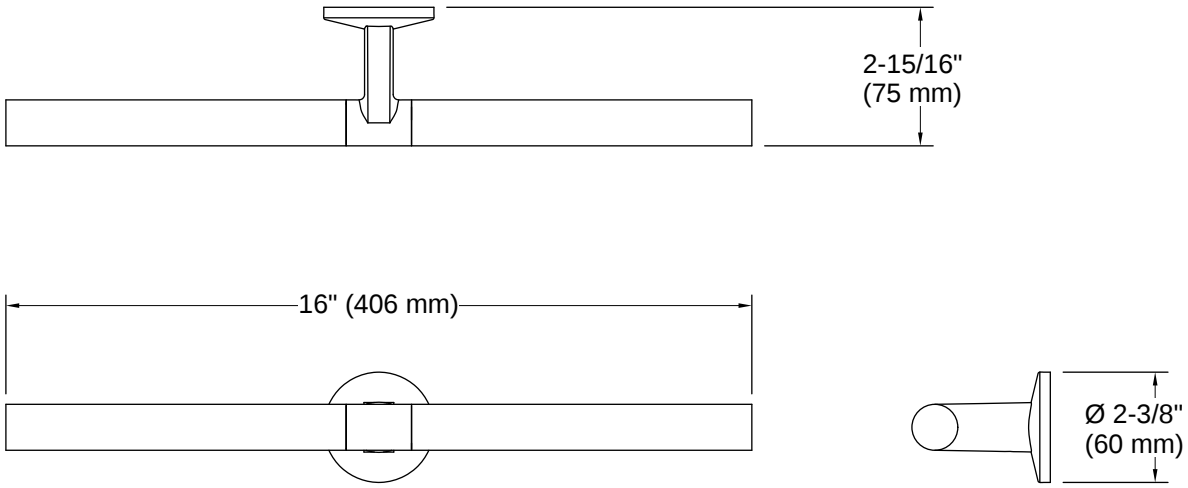

Installation Notes

Install this product according to the installation instructions.

CAUTION: Risk of personal injury. Do not install these products in any area where they are likely to be used inadvertently as a grab bar or support bar. These products are not designed or intended for use as a grab bar or support bar.

1-800-4KOHLER (1-800-456-4537)
Kohler Co. reserves the right to make revisions without notice to product specifications.
For the most current specification sheet, go to www.kohler.com USA or www.kohler.ca Canada.
11-08-2026 22:14 - US-CA

THE BOLD LOOK OF KOHLER.