KOHLER®

Components™

Vertical toilet paper holder

K-78383T

Features

- Vertical holder makes changing toilet paper quick and simple
- Coordinates with Components faucets, accessories, and showering components to complete your bathroom

Material

- Premium material construction for durability and reliability

Installation

- Installation hardware and template included
- Wall-mount



Codes/Standards

None Applicable

See website for detailed warranty information.

KOHLER®

Components™

Vertical toilet paper holder

K-78383T

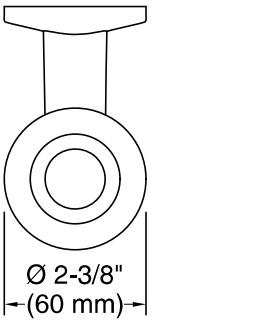

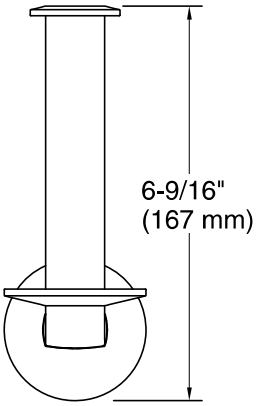

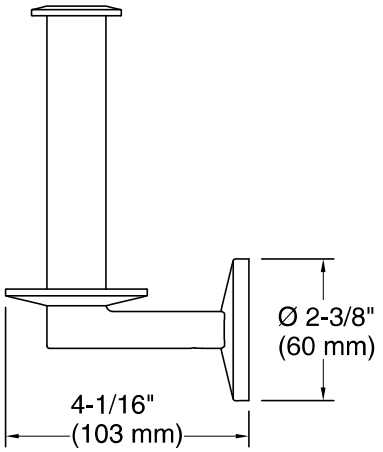

Technical Information

All product dimensions are nominal.

Material:	Zinc, Brass

Notes

Install this product according to the installation instructions.