KOHLER®

Components™

406 mm double towel arm

K-78379T

Features

- 16" (406 mm) double towel arm
- Open-ended design for easy access
- Coordinates with Components faucets, accessories, and showering components to complete your bathroom

Material

- Premium material construction for durability and reliability

Installation

- Installation hardware included
- Wall-mount



Codes/Standards

None Applicable

See website for detailed warranty information.

KOHLER®

Components™

406 mm double towel arm

K-78379T

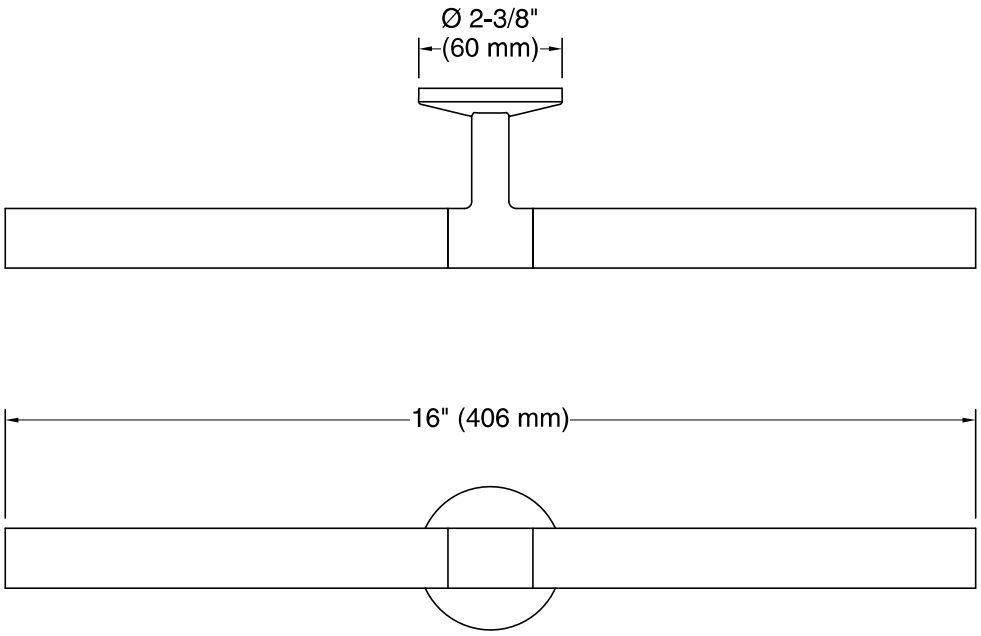

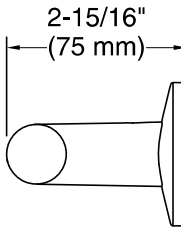

Technical Information

All product dimensions are nominal.

Material: Brass, Zinc

Notes

Install this product according to the installation instructions.

CAUTION: Risk of personal injury. Do not install these products in any area where they are likely to be used inadvertently as a grab bar or support bar. These products are not designed or intended for use as a grab bar or support bar.