KOHLER®

Components™

Robe hook

K-78378T

Features

- Robe hook provides convenient hanging storage for robes, towels, and other bath items
- Coordinates with Components faucets, accessories, and showering components to complete your bathroom

Material

- Premium material construction for durability and reliability

Installation

- Installation hardware included
- Wall-mount



Codes/Standards

None Applicable

See website for detailed warranty information.

KOHLER®

Components™

Robe hook

K-78378T

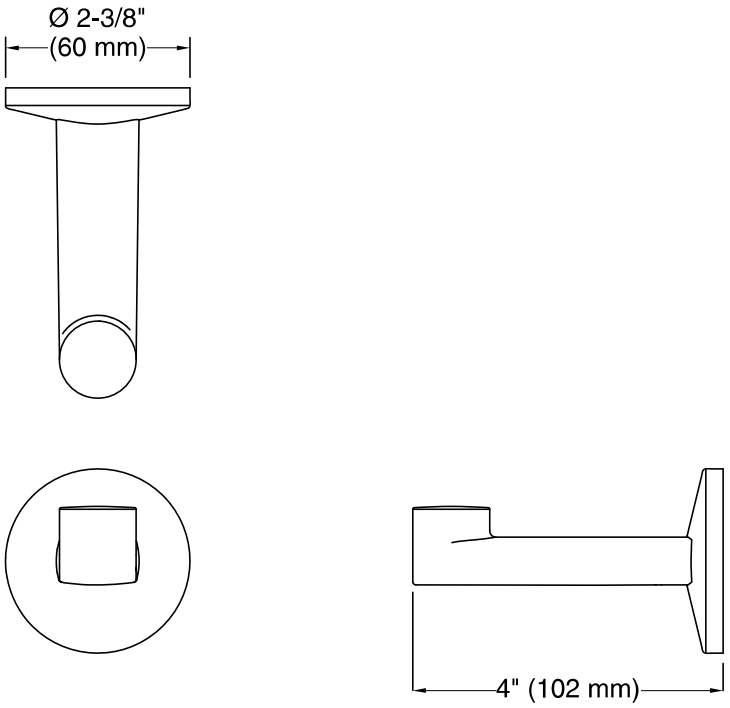

Technical Information

All product dimensions are nominal.

Material: Zinc

Notes

Install this product according to the installation instructions.

CAUTION: Risk of personal injury. Do not install these products in any area where they are likely to be used inadvertently as a grab bar or support bar. These products are not designed or intended for use as a grab bar or support bar.